BN Products-USA™
A DIVISION OF BENNER-NAWMAN, INC.
WWW.BNPRODUCTS.COM

BNCE-20C-24V

Cordless Cutting Edge Saw™

BN Products-USA™ Customer Service: (800) 992-3833

Multi-Material Saw | Rebar | Tubing | Threaded Rod | Conduit & more

THE CUTTING EDGE SAW™
BNCE SERIES

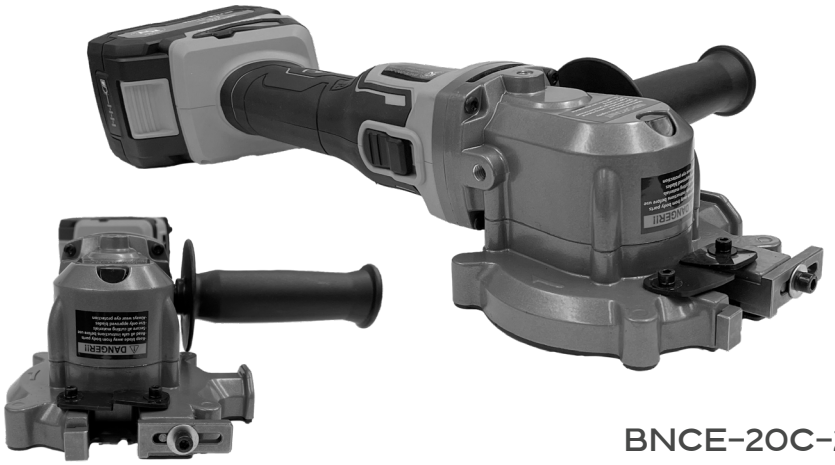

BNCE-20C-24V
CUTTING EDGE SAW™

The BNCE-20C-24V is a cordless version of the lightweight and compact multi-material Cutting Edge Saw™. This low-RPM, cold-cutting saw is ideal for cutting Grade 60 Rebar (up to #6), rod, pipe, and other materials with a maximum cutting depth of 7/8"

Specifications

CONSTRUCTION TYPE	Battery Powered Tool
BLADE SIZE	4-3/8" (110 mm)
STANDARD REPLACEMENT BLADE	RB-BNCE-KNH Tungsten Carbide Tipped / 24T (2 ea. Supplied)
BLADE MOUNTING TYPE	BLADE ARBOR SCREWS (4)
NO LOAD RPM	2,000
DEPTH OF CUT	7/8" (22 mm)
TOOL LENGTH W/ BATTERY	17-1/4" (438.2 mm)
TOOL WIDTH W/ BATTERY	5-1/4" (133 mm)
TOOL HEIGHT W/BATTERY	3- 1/4" (82.6 mm)
NET TOOL WEIGHT	7.2 lbs. (3.5 kg)
POWER	24V Lithium-Ion Battery (2 ea. supplied)
AMPERAGE HOURS	4.0 Ah
WATT HOURS OF BATTERY	96 Wh
NUMBER OF CUTS / CHARGE	120+ (#5-60 grade Rebar)

Blades

- **RB-BNCE-KNH**: BNCE-20 Series Cutting Edge Saw™ "STANDARD" TCT Replacement Blade (110 mm) for cutting ferrous and non-ferrous materials (Rebar, Tubing, All-Thread, and general usage)
- **RB-BNCE-MESH**: Specialty Blade for cutting wire mesh

Ordering and Assistance
Contact Customer Service at:

(800) 992-3833

BN Products-USA™

3450 N. Sabin Brown Road | Wickenburg, AZ 85390

(800) 992-3833 | www.BNProducts.com

PRODUCT PARTS GUIDE

BNCE-20C-24V Exploded View

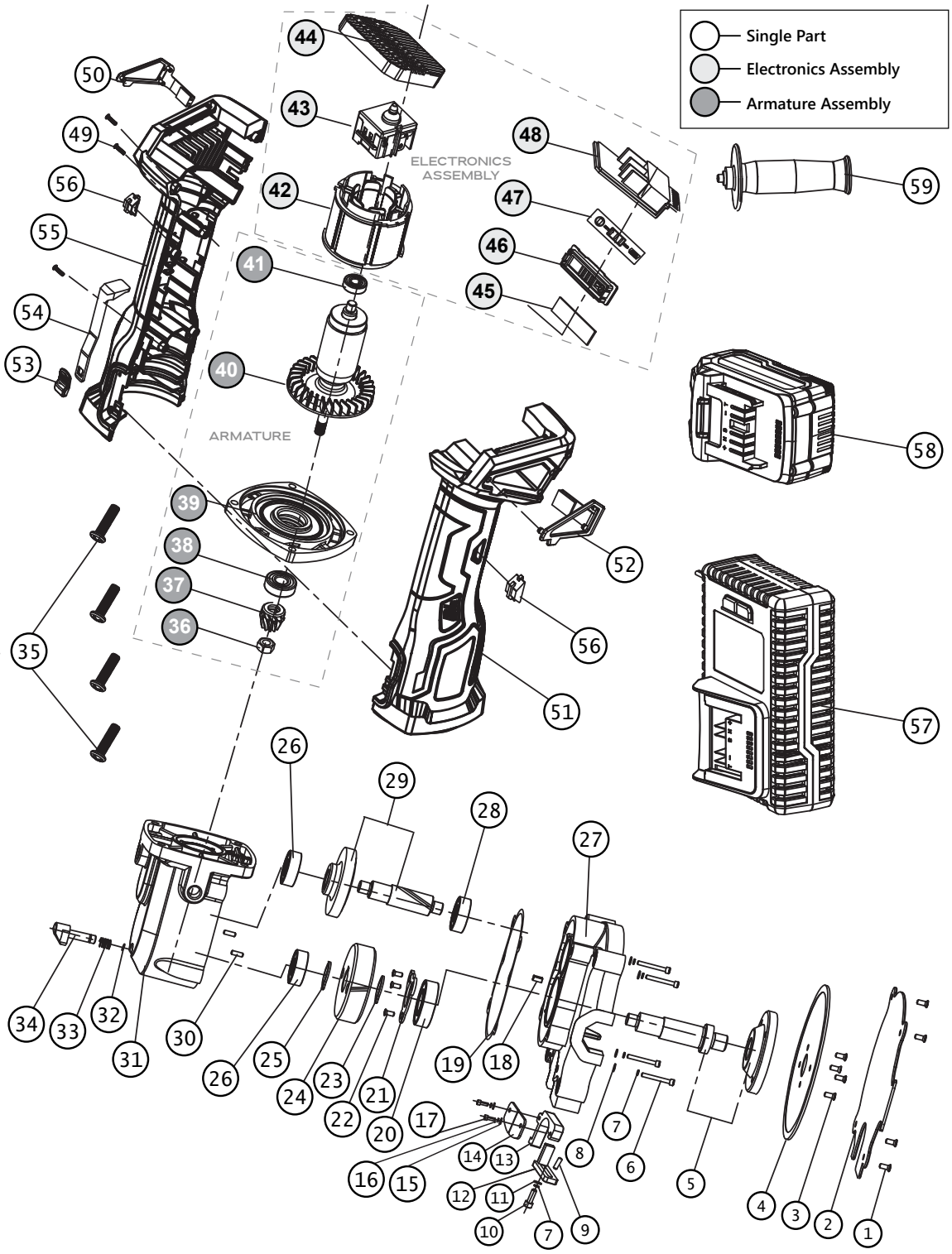

Parts List: Next Page

BNCE-20C-24V Cutting Edge Saw™ Parts List

No.	Part #	Assembly #	Description	QTY
1	BNCEP1-71		HEXAGON SOCKET COUNTERSUNK HEAD BOLT M5X14(CLASS 12.9)	4
2	BNCEP1-72		BLADE COVER	1
3	BNCEP1-73		HEXAGON SOCKET COUNTERSUNK HEAD BOLT M5X8(CLASS 12.9)	4
4	RB-BNCE-20		BLADE FOR BNCE-20/BNCE-20-24V	2
5	BNCEP1-75		BLADE FLANGE AND SPINDLE	1
6	BNCEP-07		HEXAGON SOCKET HEAD CAP HEAD SCREW M5X30	1
7	BNCEP-08		SPRING LOCK WASHER-5MM	4
8	BNCEP-09		PLAIN WASHER-5MM	5
9	BNCEP-19		PIN-A5X10	5
10	BNCEP-20		HEXAGON SOCKET HEAD CAP HEAD SCREW M5X16	1
11	BNCEP-66		BIG PLAIN WASHER-5MM	1
12	BNCEP-18		MOVABLE CUTTING GUIDE BLOCK	1
13	BNCEP-17		FIXED CUTTING GUIDE BLOCK	1
14	BNCEP-21		LEFT AND RIGHT RUBBER PLATE	1
15	BNCEP-22		BIG PLAIN WASHER-4MM	2
16	BNCEP-23		SPRING LOCK WASHER-4MM	2
17	BNCEP-24		HEXAGON SOCKET HEAD CAP HEAD SCREW M4X16	2
18	BNCEP-78		FLAT KEY-5X5X14	2
19	BNCEP-12		GASKET SEAL	1
20	BNCEP-25		BALL BEARING-6002-2RS	1
21	BNCEP30-21		BEARING PLATE	1
22	BNCE-30-22		PHILIPS HEADCOUNTERSUNK SCREW M4X10	1
23	BNCEP-26		SPACER	3
24	BNCEP30-25		BIG GEAR	1
25	BNCEP-28		RETAINING RING	1
26	BNCEP24V-24		BALL BEARING-608-2Z	1
27	BNCEP1-77		HOUSING ALUM (NEW STYLE)	2
28	BNCEP24V-26		BALL BEARING 628-2Z	1
29	BNCEP24V-27/28		GEAR SHAFT / BIG BEVEL GEAR	1
30	BNCEP-29		PIN - A5 X 16	1
31	BNCEP24V-30		ALUNMIUM GEAR BOX HOUSING	1
32	BNCEP-31		STEEL RING	1
33	BNCEP-32		SPRING FOR LOCK BUTTON	1
34	BNCEP-33		BLADE LOCKING BUTTON	1
35	BNCEP24V-34		HEX PAN HEAD TAPPING SCREW SST3.9X30	4

**Replacement Assemblies defined in Parts Guide are sold as a single unit*

BNCE-20C-24V

Cordless Cutting Edge Saw™

BN Products-USA™ Customer Service: (800) 992-3833

No.	Part #	Assembly #	Description	QTY
36	BNCEP24V-35	ARMATURE ASSEMBLY *102597 #36-41	NUT M6	1
37	BNCEP24V-36		PINION 12 TOOTH	1
38	BNCEP24V-37		BALL BEARING-608-2RS	1
39	BNCEP24V-38		ARMATURE SUPPORT C1	1
40	102637		ARMATURE	1
41	BNCEP24V-40		BALL BEARING-696-2RS	1
42	102639	ELECTRONICS ASSEMBLY *102598 #42-48	STATOR	1
43	BNCEP24V-42-2		SWITCH	1
44	102641		CONTROLLER BOARD	1
45	102650		BATTERY LIGHT PCB	1
46	102651		BATTERY LIGHT COVER	1
47	102652		BATTERY LIGHT LABEL	1
48	102653		BATTERY PIN ASSEMBLY	1
49	102646		PAN HEAD TAPPING SCREW 2.9X14	6
50	102647		DUST PROTECTION-RIGHT	1
51	102648		LEFT HOUSING	1
52	102649		DUST PROTECTION-LEFT	1
53	102642		SWITCH BUTTON	1
54	102643		POLE SWITCH	1
55	102644		RIGHT HOUSING	1
56	102645		SENSOR WINDOW BLACK	2
57	BNCE-24VLI-4C		BATTERY	2
58	BNCE-24VCHGR-120C		CHARGER	1
59	BNCEP-67		3-POSITION SIDE HANDLE	1

**Replacement Assemblies defined in Parts Guide are sold as a single unit*

BNCE-20C-24V External Parts Diagram

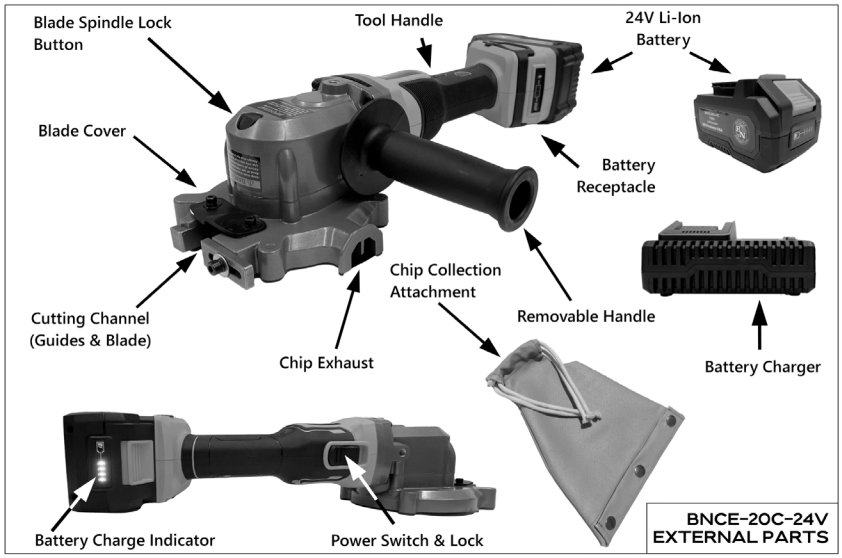

Accessories

- BNCEP-68 - Chip Collection Attachment

- 102578 - Molded Carrying Case

- BNTB-20 - Heavy Duty Tool Bag