BN Products-USA™
A DIVISION OF BENNER-NAWMAN, INC.
WWW.BNPRODUCTS.COM

BNCE-30C-24V

Cordless Cutting Edge Saw™

BN Products-USA™ Customer Service: (800) 992-3833

Multi-Material Saw | Rebar | Tubing | Threaded Rod | Conduit & more

THE CUTTING EDGE SAW™
BNCE SERIES

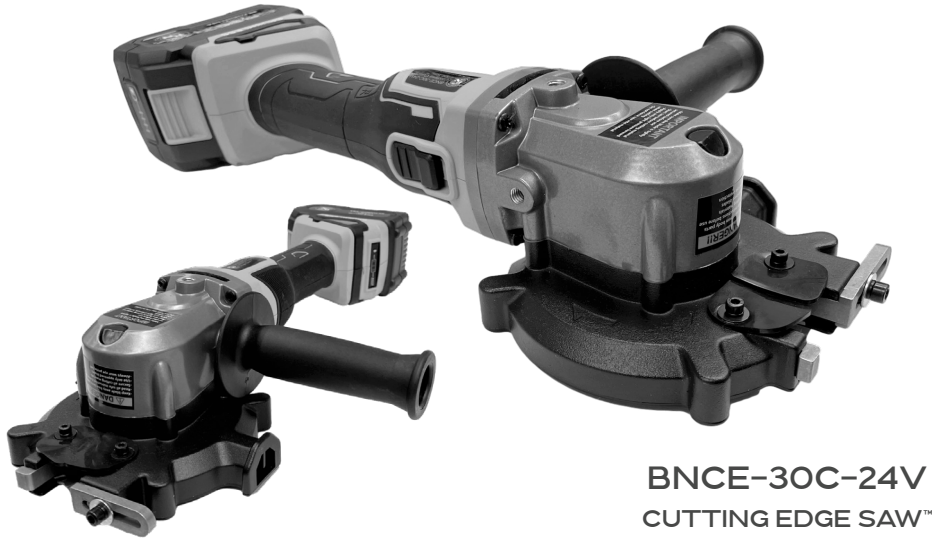

The BNCE-30C-24V is a cordless version of the lightweight and compact multi-material Cutting Edge Saw™. This low-RPM, cold-cutting saw is ideal for cutting Grade 60 Rebar (up to #8), rod, pipe, and other materials with a maximum cutting depth of 1-1/8"

Specifications

CONSTRUCTION TYPE	Battery Powered Tool
BLADE SIZE / TYPE	5" (127 mm) / Tungsten Carbide Tipped (2 each included with saw)
REPLACEMENT BLADE	RB-BNCE-30
BLADE NUMBER OF TEETH	30
NO LOAD RPM	1500
DEPTH OF CUT	1.181" (30mm)
TOOL LENGTH W/ BATTERY	17 1/2" (444.5 mm)
TOOL WIDTH W/ BATTERY	5 1/4" (133 mm)
TOOL HEIGHT W/BATTERY	3 1/4" (82.6 mm)
NET TOOL WEIGHT	7.2 lbs. (3.5 kg)
POWER	24V Lithium-Ion Battery (2 ea. supplied)
AMPERAGE	4.0 Ah
WATTAGE	96 Wh

Blades

- **RB-BNCE-30:** BNCE-30 Series Cutting Edge Saw™ "STANDARD" TCT Replacement Blade (127 mm) for cutting ferrous and non-ferrous materials (Rebar, Tubing, All-Thread, and general usage)

Ordering and Assistance
Contact Customer Service at:

(800) 992-3833

BN Products-USA™

3450 N. Sabin Brown Road | Wickenburg, AZ 85390

(800) 992-3833 | www.BNProducts.com

PRODUCT PARTS GUIDE

BNCE-30C-24V Exploded View

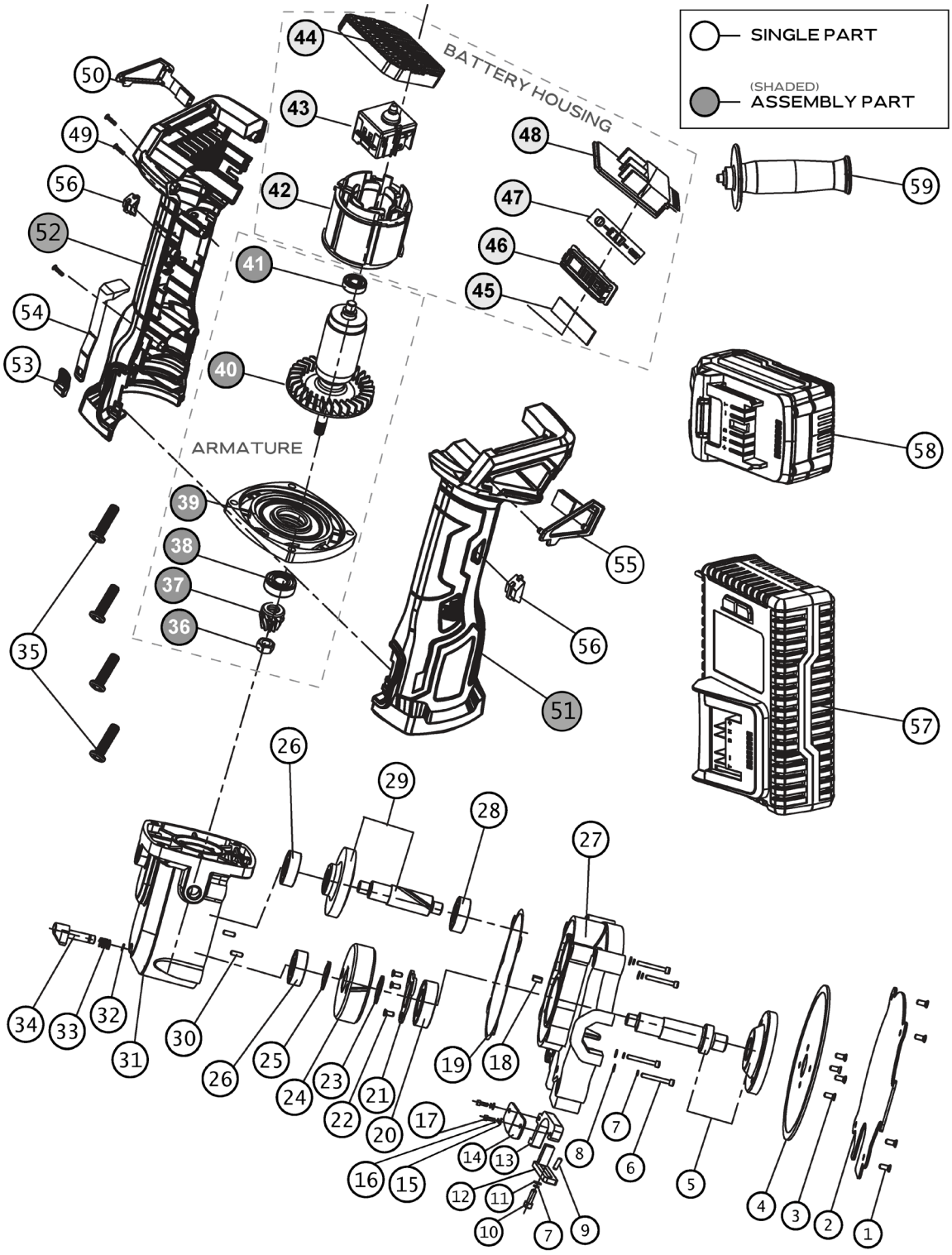

Parts List: Next Page

BNCE-30C-24V Cutting Edge Saw™ Parts List

No.	Part #	Assembly #	Description	QTY
1	BNCEP1-71		HEXAGON SOCKET COUNTERSUNK HEAD BOLT M5X14(CLASS 12.9)	4
2	BNCEP30-02		BOTTOM PLATE GUARD	1
3	BNCEP1-73		HEXAGON SOCKET COUNTERSUNK HEAD BOLT M5X8(CLASS 12.9)	4
4	RB-BNCE-30		BLADE FOR BNCE-30/BNCE-30-24V	1
5	BNCEP1-75		BLADE FLANGE AND SPINDLE	1
7	102664		M5X30 CAP SCREW, LOCK WASHER, AND WASHER SET	4
8	BNCEP-08		SPRING LOCK WASHER - 5MM	1
9	BNCEP-19		PIN-A5X10	1
10	BNCEP-20		HEXAGON SOCKET HEAD CAP HEAD SCREW M5X16	1
11	BNCEP-66		BIG PLAIN WASHER-5MM	1
12	BNCEP30-18		MOVABLE CUTTING GUIDE BLOCK	1
13	BNCEP30-17		FIXED CUTTING GUIDE BLOCK	1
14	BNCEP30-16		LEFT AND RIGHT RUBBER PLATE	1
15	BNCEP-22		BIG PLAIN WASHER-4MM	2
16	BNCEP-23		SPRING LOCK WASHER-4MM	2
17	BNCEP-24		HEXAGON SOCKET HEAD CAP HEAD SCREW M4X16	2
18	BNCEP-78		FLAT KEY-5X5X14	1
19	BNCEP-12		GASKET SEAL	1
20	BNCEP-25		BALL BEARING-6002-2RS	1
21	BNCEP30-21		BEARING PLATE	1
22	BNCE-30-22		PHILIPS HEADCOUNTERSUNK SCREW M4X10	3
23	BNCEP-26		SPACER	1
24	BNCEP30-25		BIG GEAR	1
25	BNCEP-28		RETAINING RING	1
26	BNCEP24V-24		BALL BEARING-608-2Z	1
27	BNCEP30-10		HOUSING ALUM (NEW STYLE)	1
28	BNCEP24V-26		BALL BEARING 628-2Z	1
29	BNCEP24V-27/28		GEAR SHAFT / BIG BEVEL GEAR	1
30	BNCEP-29		PIN - A5 X 16	2
31	BNCEP24V-30		ALUNMIUM GEAR BOX HOUSING	1
32	BNCEP-31		STEEL RING	1
33	BNCEP-32		SPRING FOR LOCK BUTTON	1
34	BNCEP-33		BLADE LOCKING BUTTON	1
35	BNCEP24V-34		HEX PAN HEAD TAPPING SCREWSST3.9X30	4

**Replacement Assemblies defined in Parts Guide are sold as a single unit*

***Item numbers may not be sequential or are omitted; this is intentional to accommodate periodic changes to part numbers or parts assemblies*

No.	Part #	Assembly #	Description	QTY
36	*BNCEP24V-35*	ARMATURE ASSEMBLY 102597	NUT M6	1
37	*BNCEP24V-36*		PINION 12 TOOTH	1
38	*BNCEP24V-37*		BALL BEARING-608-2RS	1
39	*BNCEP24V-38*		ARMATURE SUPPORT C1	1
40	*102637*	*#36-41*	ARMATURE	1
41	*BNCEP24V-40*		BALL BEARING-696-2RS	1
42	*102639*	ELECTRONICS ASSEMBLY 102598	STATOR	1
43	*BNCEP24V-42-2*		SWITCH	1
44	*102641*		CONTROLLER BOARD	1
45	*102650*		BATTERY LIGHT PCB	1
46	*102651*	*#42-48*	BATTERY LIGHT COVER	1
47	*102652*		BATTERY LIGHT LABEL	1
48	*102653*		BATTERY PIN ASSEMBLY	1
49	102646		PAN HEAD TAPPING SCREW 2.9X14	6
50	102647		DUST PROTECTION-RIGHT	1
51	*102648*	HOUSING PAIR 102665	LEFT HOUSING	1
52	*102644*		RIGHT HOUSING	1
53	102642		SWITCH BUTTON	1
54	102643		POLE SWITCH	1
55	102649		DUST PROTECTION-LEFT	1
56	102645		SENSOR WINDOW BLACK	2
57	BNCE-24VCHGR-120C		CHARGER	1
58	BNCE-24VLI-4C		BATTERY	2
59	BNCEP-67		3-POSITION SIDE HANDLE	1

**Replacement Assemblies defined in Parts Guide are sold as a single unit*

BNCE-30C-24V External Parts Diagram

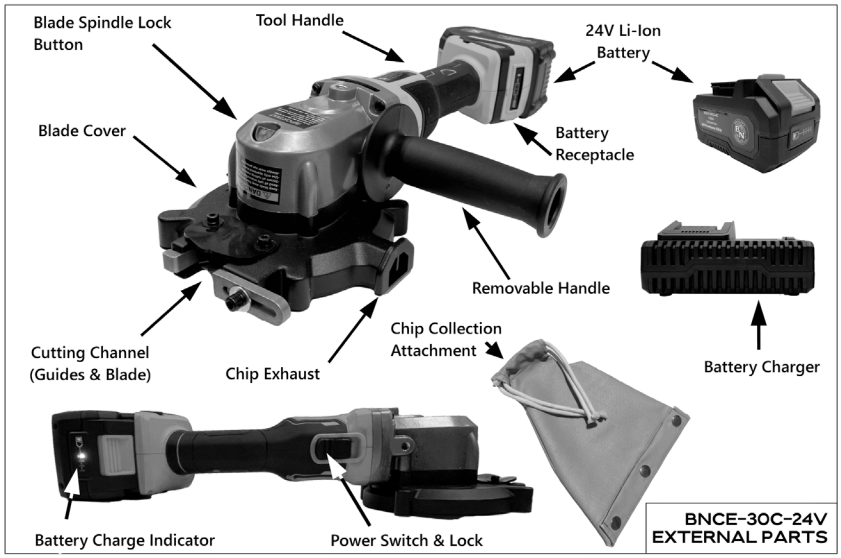

Accessories

- **BNCEP-68 - Chip Collection Attachment**

- **102578 - Molded Carrying Case**

- **BNTB-20 - Heavy Duty Tool Bag**